Manual motor protectors
Product index

4 - Manual motor protectors

Manual motor protectors

Types MS116, MS132, MS45x, MS49x

Manual motor protectors are electromechanical devices for motor and circuit protection. These devices offer local motor disconnect means, manual ON/OFF control, and protection against short circuit, overload, and phase loss conditions. Manual motor protection saves cost, panel space, and ensures quick and reliable short-circuit protection by reacting within milliseconds. Close coupling adaptors are available for combination with ABB contactors in various applications.

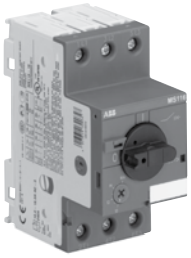

Type MS116

- Manual motor protectors suitable for use with single and three phase motors up to 25 hp
- Suitable as motor disconnect in single motor applications and group motor installations as outlined in NEC Article 430.53(C)
- 15 thermal setting ranges from 0.16 to 32 Amperes, overload Class 10A
- Phase loss sensitivity per IEC/EN 60947-4-1
- Short circuit current ratings up to 30 kA
- Motor controllers, manual (NLRV, NLRV7), UL file E137861

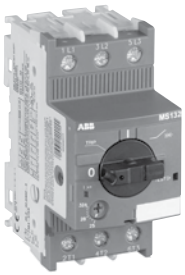

Type MS132

- Manual motor protectors suitable for use with single and three phase motors up to 25 hp
- Suitable as motor disconnect in single motor applications and group motor installations as outlined in NEC Article 430.53(C)
- Suitable for Tap conductor protection as outlined in NEC Article 430.53(D)(3)
- Suitable as self-protected combination motor controllers Types E and F as outlined in UL 508 and UL 60947-4-1A
- 15 thermal setting ranges from 0.16 to 32 Amperes, overload Class 10
- Phase loss sensitivity per IEC/EN 60947-4-1
- Short circuit current ratings up to 65 kA
- Motor controllers, manual (NLRV, NLRV7), UL file E137861
- Combination motor controllers (NKJH, NKJH7), UL file E345003

Type MS45x

- Manual motor protectors suitable for use with single and three phase motors up to 50 hp
- Suitable as motor disconnect in single motor applications and group motor installations as outlined in NEC Article 430.53(C)
- Suitable as self-protected combination motor controller Type E as outlined in UL 508 and UL 60947-4-1A
- Phase loss sensitivity per IEC/EN 60947-4-1
- 3 thermal setting ranges from 28 to 50 Amperes, overload Classes 10 and 20
- Short circuit current ratings up to 65 kA
- Motor controllers, manual (NLRV), UL file E167205
- Combination motor controllers (NKJH, NKJH7), UL file E195536

Type MS49x

- Manual motor protectors suitable for use with single and three phase motors up to 100 hp
- Suitable as motor disconnect in single motor applications and group motor installations as outlined in NEC Article 430.53(C)
- Suitable as self-protected combination motor controller Types E as outlined in UL 508 and UL 60947-4-1A
- Phase loss sensitivity per IEC/EN 60947-4-1
- 6 thermal setting ranges from 28 to 100 Amperes, overload Classes 10 and 20
- Short circuit current ratings up to 65 kA
- Motor controllers, manual (NLRV), UL file E167205
- Combination motor controllers (NKJH, NKJH7), UL file E195536

Manual motor Protectors

Phone: 800.894.0412 - Fax: 888.723.4773 - Web: www.clrwtr.com - Email: info@clrwtr.com

General information
Suitable applications

Single motor applications, suitable as motor disconnect

A manual motor protector is a simple, compact and economical alternative to conventional magnetic motor controllers for local control of a single motor.
Upstream short-circuit and overcurrent protection in the form of either fuses or a circuit breaker is still required. Manual motor protectors can replace the overload relay, contactor, and any wiring or components necessary for controlling a contactor (i.e. pushbuttons) by utilizing the integral rotary handle for manual ON/OFF control. Manual motor protectors also offer instantaneous (magnetic only) short-circuit trip functionality, allowing for these devices to be utilized as UL 508/60947-4-1A circuit protectors. MS Series Manual Motor Protectors are marked as “suitable as motor disconnect”, with the Types MS132 and MS4xx not requiring additional accessories. This marking allows the devices to be utilized as local disconnects within line-of-sight of the motor.

Typical Single-motor Branch Circuits

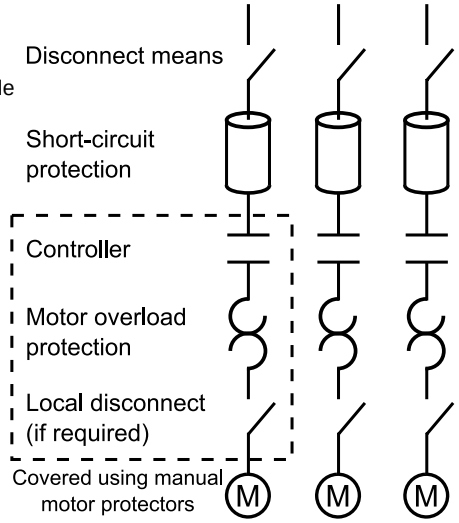

Group motor installation

Group motor installations utilize a single branch circuit protective device to protect multiple loads. Per NEC Article 430.53(C), this branch circuit protection must be in the form of either fuses or an inverse-time (thermal magnetic, MCCB) circuit breaker. Individual overload protection must be provided for each load. Devices utilized in group motor installations must be marked as suitable in such applications. Branch circuit protection for group motor installations is sized based on the sum of:
1. 250% (MCCB) or 175% (fuses) of the full-load current of the largest load in the group, plus
2. The sum of the full-load current of all additional loads - Conductors on the load side of the branch circuit protective device are sized in accordance with the full-load current rating of said device.

In addition to meeting the requirements outlined above, Type MS132 devices are also suitable for tap conductor protection in group installations as outlined in NEC Article 430.53(D), allowing the conductors on the load-side of the branch circuit protective device to be sized no less than one-tenth (1/10) of the full-load current rating of the protective device.

Devices suitable for these applications

Application	Manual motor protector type			
	MS116	MS132	MS45x	MS49x
Motor disconnect	•	•	•	•
Group motor installation	•	•	•	•
Tap conductor protection		•		

Typical Group Motor Circuit

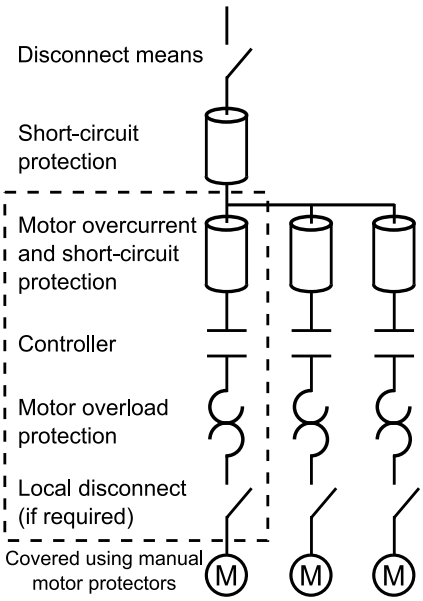

Group Motor Installations

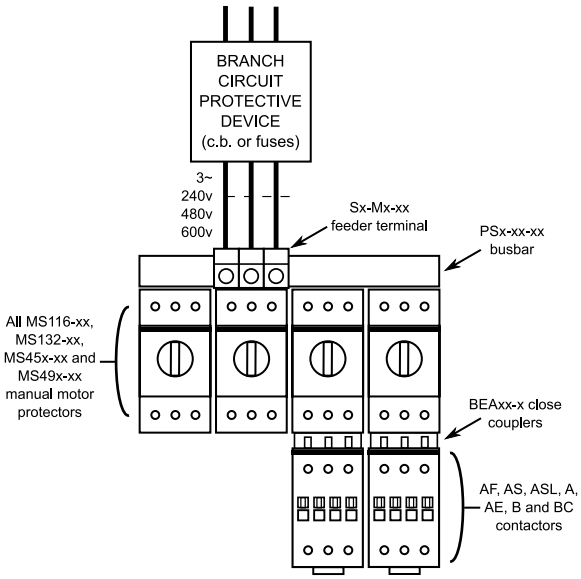

General information
Suitable applications

Combination motor controllers Types E & F

Combination motor controllers, as outlined in UL 508 Section 76, are a manufacturer's tested combination of either individual discrete components or a single controller. Fulfilling all the necessary components for a motor branch circuit, combination motor controllers provide a disconnecting and load switching means, as well as overload and short-circuit protection. These devices offer additional flexibility when selecting components for motor control and protection.

Combination motor controllers can also utilize busbar for self-protected, multiple motor installations. Busbar must be selected and sized in accordance with the full-load current rating of the feeder circuit protective device.

Definitions

Type E Combination Motor Controllers are comprised of a UL 508 Disconnect, Branch Circuit Protector Device, Motor Controller and Motor Overload typically included in a single Self-protected Control Device (manual motor protector). Following a short-circuit fault, Type E Combination Motor Controllers are tested to operate for 6,000 electrical cycles, plus an additional 4,000 mechanical cycles, as outlined in UL 508 Table 83.1.

Type F Combination Motor Controllers are comprised of a UL 508 Disconnect, Branch Circuit Protector Device, and Motor Overload typically included in a single Manual Self-protected Combination Controller with additional Magnetic or Solid State Motor Controller utilized for remote operation (manual motor protector + contactor). The operational requirements following a short-circuit fault differ for the manual motor protector and contactor.

Devices suitable for these applications

Combination motor controller	Manual motor protector type			
	MS116	MS132 + S1-M3-xx	MS45x-xxE	MS49x-xxE
Self-protected, Type E		•	•	•
Self-protected,Type F		•		

Typical Self-protected Branch Circuits

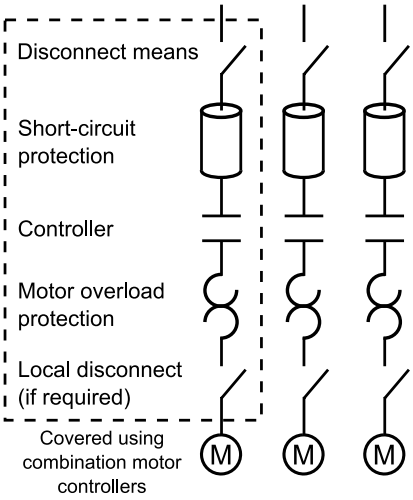

Combination Motor Controllers

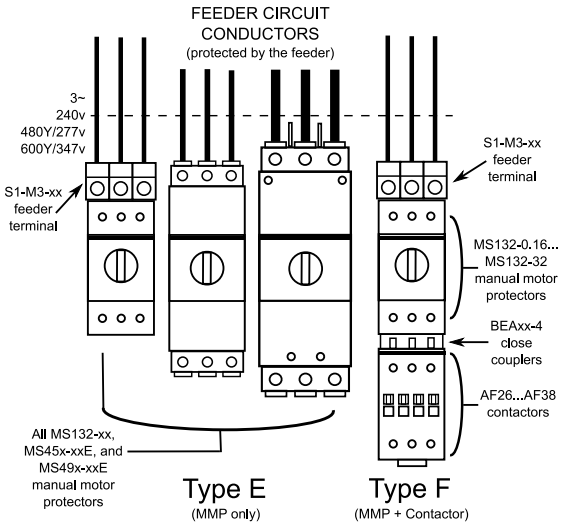

Combination Motor Controllers (for multiple motors)

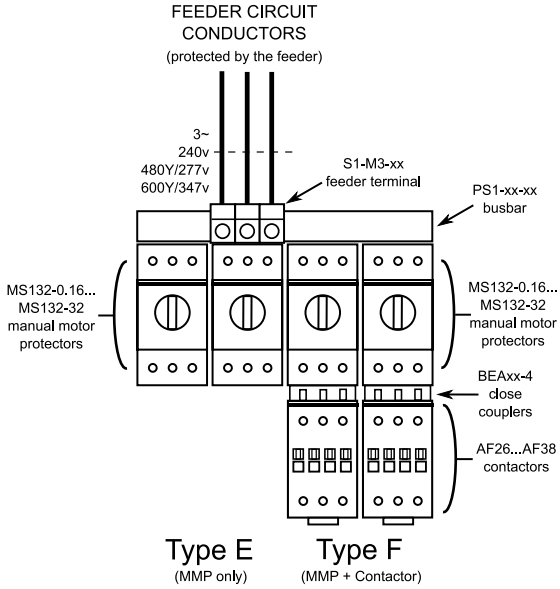

General information
Motor ratings

Horsepower to full-load Amperes for AC induction motors

Horse-power (hp)	Full Load Amperes (FLA)													
	110…120 v ac		200 v ac		208 v ac		220…240 v ac		380…415 v ac		440…480 v ac		550…600 v ac	
	Single phase	Three phase	Single phase	Three phase	Single phase	Three phase	Single phase	Three phase	Single phase	Three phase	Single phase	Three phase	Single phase	Three phase
1/10	3.0	-	-	-	-	-	1.5	-	1.0	-	-	-	-	-
1/8	3.8	-	-	-	-	-	1.9	-	1.2	-	-	-	-	-
1/6	4.4	-	2.5	-	2.4	-	2.2	-	1.4	-	-	-	-	-
1/4	5.8	-	3.3	-	3.2	-	2.9	-	1.8	-	-	-	-	-
1/3	7.2	-	4.1	-	4.0	-	3.6	-	2.3	-	-	-	-	-
1/2	9.8	4.4	5.6	2.5	5.4	2.4	4.9	2.2	3.2	1.3	2.5	1.1	2.0	0.9
3/4	13.8	6.4	7.9	3.7	7.6	3.5	6.9	3.2	4.5	1.8	3.5	1.6	2.8	1.3
1	16.0	8.4	9.2	4.8	8.8	4.6	8.0	4.2	5.1	2.3	4.0	2.1	3.2	1.7
1-1/2	20.0	12.0	11.5	6.9	11.0	6.6	10.0	6.0	6.4	3.3	5.0	3.0	4.0	2.4
2	24.0	13.6	13.8	7.8	13.2	7.5	12.0	6.8	7.7	4.3	6.0	3.4	4.8	2.7
3	34.0	19.2	19.6	11.0	18.7	10.6	17.0	9.6	10.9	6.1	8.5	4.8	6.8	3.9
5	56.0	30.4	32.2	17.5	30.8	16.7	28.0	15.2	17.9	9.7	14.0	7.6	11.2	6.1
7-1/2	80.0	44.0	45.0	25.3	44.0	24.2	40.0	22.0	27.0	14.0	21.0	11.0	16.0	9.0
10	100.0	56.0	57.5	32.2	55.0	30.8	50.0	28.0	33.0	18.0	26.0	14.0.	20.0	11.0
15	135.0	84.0	-	48.3	-	46.2	68.0	42.0	44.0	27.0	34.0	21.0	27.0	17.0
20	-	108.0	-	62.1	-	59.4	88.0	54.0	56.0	34.0	44.0	27.0	35.0	22.0
25	-	136.0	-	78.2	-	74.8	110.0	68.0	70.0	44.0	55.0	34.0	44.0	27.0
30	-	160.0	-	92.0	-	88.0	136.0	80.0	87.0	51.0	68.0	40.0	54.0	32.0
40	-	208.0	-	120.0	-	114.0	176.0	104.0	112.0	66.0	88.0	52.0	70.0	41.0
50	-	260.0	-	150.0	-	143.0	216.0	130.0	139.0	83.0	108.0	65.0	86.0	52.0
60	-	-	-	177.0	-	169.0	-	154.0	-	103.0	-	77.0	-	62.0
75	-	-	-	221.0	-	211.0	-	192.0	-	128.0	-	96.0	-	77.0
100	-	-	-	285.0	-	273.0	-	248.0	-	165.0	-	124.0	-	99.0
125	-	-	-	359.0	-	343.0	-	312.0	-	208.0	-	156.0	-	125.0
150	-	-	-	414.0	-	396.0	-	360.0	-	240.0	-	180.0	-	144.0
200	-	-	-	552.0	-	528.0	-	480.0	-	320.0	-	240.0	-	192.0
250	-	-	-	-	-	-	-	604.0	-	403.0	-	302.0	-	242.0
300	-	-	-	-	-	-	-	722.0	-	482.0	-	361.0	-	289.0
350	-	-	-	-	-	-	-	828.0	-	560.0	-	414.0	-	336.0
400	-	-	-	-	-	-	-	954.0	-	636.0	-	477.0	-	382.0
450	-	-	-	-	-	-	-	1030.0	-	-		515.0	-	412.0
500	-	-	-	-	-	-	-	1180.0	-	786.0	-	590.0	-	472.0

Full-load motor-running currents in Amperes corresponding to various AC horsepower ratings as published in Table 50.1 of UL 508.

General information

Pilot duty ratings and overload trip classes

Pilot duty ratings for AC control circuit contacts

Contact rating designation	Continuous thermal, test current (A)	Maximum current, 50/60 Hz (A)									
		120 v ac		240 v ac		480 v ac		600 v ac		Volt-amperes	
		Make	Break	Make	Break	Make	Break	Make	Break	Make	Break
A150	10	60	6.00	-	-	-	-	-	-	7200	720
A300	10	60	6.00	30	3.00	-	-	-	-	7200	720
A600	10	60	6.00	30	3.00	15	1.50	12	1.20	7200	720
B150	5	30	3.00	-	-	-	-	-	-	3600	360
B300	5	30	3.00	15	1.50	-	-	-	-	3600	360
B600	5	30	3.00	15	1.50	7.5	0.75	6	0.60	3600	360
C150	2.5	15	1.5	-	-	-	-	-	-	1800	180
C300	2.5	15	1.5	7.5	0.75	-	-	-	-	1800	180
C600	2.5	15	1.5	7.5	0.75	3.75	0.375	3.00	0.30	1800	180
D150	1.0	3.60	0.60	-	-	-	-	-	-	432	72
D300	1.0	3.60	0.60	1.80	0.30	-	-	-	-	432	72
E150	0.5	1.80	0.30	-	-	-	-	-	-	216	36

Mechanical switching ratings and test values as published in Table 1-4-1 of NEMA ICS 5-2000 (R2005, R2010)

Pilot duty ratings for DC control circuit contacts

Contact rating designation	Continuous thermal, test current (A)	Maximum current, 50/60 Hz (A)			
		120 v dc	250 v dc	301 to 600 v dc	Volt-amperes
		Make / Break	Make / Break	Make / Break	Make / Break
N150	10	2.2	-	-	275
N300	10	2.2	1.1	-	275
N600	10	2.2	1.1	0.40	275
P150	5.0	1.1	-	-	138
P300	5.0	1.1	0.55	-	138
P600	5.0	1.1	0.55	0.20	138
Q150	2.5	0.55	-	-	69
Q300	2.5	0.55	0.27	-	69
Q600	2.5	0.55	0.27	0.10	69
R150	1.0	0.22	-	-	28
R300	1.0	0.22	0.11	-	28

Mechanical switching ratings and test values as published in Table 1-4-1 of NEMA ICS 5-2000 (R2005, R2010)

Overload trip classes

Trip class	Tripping time T_p (seconds)
10A	$2 < T_p \leq 10$
10	$4 < T_p \leq 10$
20	$6 < T_p \leq 20$
30	$9 < T_p \leq 30$

Trip classes as published in Table 2 of UL 60947-4-1A.

Pilot duty rating explanation

A - 600

Max. thermal current

Max. voltage

Type MS116
For applications up to 32A

Suitable applications:

- Single motor, suitable as motor disconnect
- Group motor installation

Frame Sz. 1
MS116-0.16…MS116-16

Frame Sz. 2
MS116-20…MS116-32

MS116 Electrical ratings ①

Thermal setting range (A)	Trip class	Rated operational current I_e (A)	Rated instantaneous short-circuit current setting I_i (A)	AC Motor ratings, breaking all lines, 50/60 Hz (hp)					Catalog number
				Single phase ②		Three phase			
				120V	240V	240V	480V	600V	
0.10...0.16	10A	0.16	1.56	Horsepower not applicable; use upper limit of the device thermal setting range for rated full-load current in Amperes					MS116-0.16
0.16...0.25	10A	0.25	2.44						MS116-0.25
0.25...0.40	10A	0.40	3.90						MS116-0.4
0.40...0.63	10A	0.63	6.14						MS116-0.63
0.63...1.0	10A	1.00	11.5					1/2	MS116-1.0
1.0...1.6	10A	1.60	18.4		1/10		3/4	3/4	MS116-1.6
1.6...2.5	10A	2.50	28.8		1/6	1/2	1	1.5	MS116-2.5
2.5...4.0	10A	4.00	50.0	1/8	1/3	1	2	3	MS116-4.0
4.0...6.3	10A	6.30	78.8	1/4	1/2	1.5	3	5	MS116-6.3
6.3...10.0	10A	10.0	150	1/2	1.5	3	5	7.5	MS116-10
8.0...12.0	10A	12.0	180	1/2	2	3	7.5	10	MS116-12
10.0...16.0	10A	16.0	240	1	2	5	10	10	MS116-16
16.0...20.0	10A	20.0	300	1.5	3	5	10	15	MS116-20
20.0...25.0	10A	25.0	375	2	3	7.5	15	20	MS116-25
25.0...32.0	10A	32.0	480	2	5	10	20	25	MS116-32

MS116 Short circuit current ratings (kA)

Catalog number	UL 508 - Motor controllers, manual (NLRV)							UL 508 - Combination motor controllers (NKJH)				
	Max. fuse size (A)	Fuse class	Circuit breaker	Motor disconnect ③		Group motor installation		Self-protected Type E		Self-protected Type F		
				240V 480V	600V	240V 480V	600V	480Y / 277V	600Y / 347V	480Y / 277V	600Y / 347V	Type F contactors
MS116-0.16	200	J	No rating	30	5	30	5	Use Type MS132				
MS116-0.25				30	5	30	5					
MS116-0.4				30	5	30	5					
MS116-0.63				30	5	30	5					
MS116-1.0				30	5	30	5					
MS116-1.6				30	5	30	5					
MS116-2.5				30	5	30	5					
MS116-4.0				18	5	18	5					
MS116-6.3				18	5	18	5					
MS116-10				18	5	18	5					
MS116-12				18	5	18	5					
MS116-16				18	5	18	5					
MS116-20				18	5	18	5					
MS116-25				18	5	18	5					
MS116-32				18	5	18	5					

① Always size manual motor protectors based on the full-load current of the motor.
② For single phase connection diagram see page 4.17.
③ Suitable as motor disconnect only when provide with padlock adaptor SA1 or SA3; see accessories section.

Type MS132
For applications up to 32A

Frame Sz. 1
MS132-0.16…MS132-10

Frame Sz. 2
MS132-12…MS132-32

Suitable applications:

- Single motor, suitable as motor disconnect
- Group motor installation
- Tap conductor protection
- Combination motor controllers
  - Type E
  - Type F

MS132 Electrical ratings ①

Thermal setting range (A)	Trip class	Rated operational current I_e (A)	Rated instantaneous short-circuit current setting I_i (A)	AC Motor ratings, breaking all lines, 50/60 Hz (hp)					Catalog number
				Single phase ②		Three phase			
				120V	240V	240V	480V	600V	
0.10...0.16	10A	0.16	1.56	Horsepower not applicable; use upper limit of the device thermal setting range for rated full-load current in Amperes					MS132-0.16
0.16...0.25	10	0.25	2.44						MS132-0.25
0.25...0.40	10	0.40	3.90						MS132-0.4
0.40...0.63	10	0.63	6.14						MS132-0.63
0.63...1.0	10	1.00	11.5					1/2	MS132-1.0
1.0...1.6	10	1.60	18.4		1/10		3/4	3/4	MS132-1.6
1.6...2.5	10	2.50	28.8		1/6	1/2	1	1.5	MS132-2.5
2.5...4.0	10	4.00	50.0	1/8	1/3	1	2	3	MS132-4.0
4.0...6.3	10	6.30	78.8	1/4	1/2	1.5	3	5	MS132-6.3
6.3...10.0	10	10.0	150	1/2	1.5	3	5	7.5	MS132-10
8.0...12.0	10	12.0	180	1/2	2	3	7.5	10	MS132-12
10.0...16.0	10	16.0	240	1	2	5	10	10	MS132-16
16.0...20.0	10	20.0	300	1.5	3	5	10	15	MS132-20
20.0...25.0	10	25.0	375	2	3	7.5	15	20	MS132-25
25.0...32.0	10	32.0	480	2	5	10	20	25	MS132-32

MS132 Short circuit current ratings (kA) ③

Catalog number	UL 508 - Motor controllers, manual (NLRV)							UL 508 - Combination motor controllers (NKJH)				
	Max. fuse size (A)	Fuse class	Circuit breaker	Motor disconnect		Group motor installation ④		Self-protected Type E ⑤		Self-protected Type F ⑤		
				240V 480V	600V	240V 480V	600V	480Y / 277V	600Y / 347V	480Y / 277V	600Y / 347V	Type F contactors
MS132-0.16	Size per NEC ⑥	Any fuse class	MCCB, size per NEC ⑥ ⑦	65	47	65	47	65	47	47	47	AF26…AF38
MS132-0.25				65	47	65	47	65	47	47	47	AF26…AF38
MS132-0.4				65	47	65	47	65	47	47	47	AF26…AF38
MS132-0.63				65	47	65	47	65	47	47	47	AF26…AF38
MS132-1.0				65	47	65	47	65	47	47	47	AF26…AF38
MS132-1.6				65	47	65	47	65	47	47	47	AF26…AF38
MS132-2.5				65	47	65	47	65	47	47	47	AF26…AF38
MS132-4.0				65	47	65	47	65	47	47	47	AF26…AF38
MS132-6.3				65	18	65	18 [35]	65	18	47	47	AF26…AF38
MS132-10				65	18	65	18 [35]	65	18	47	47	AF26…AF38
MS132-12				30	18	30 [35]	18 [35]	30	-	30	-	AF26…AF38
MS132-16				30	18	30 [35]	18 [35]	30	-	30	-	AF26…AF38
MS132-20				30	18	30 [35]	18 [35]	30	-	30	-	AF26…AF38
MS132-25				30	18	30 [35]	18 [35]	30	-	30	-	AF26…AF38
MS132-32				30	18	30 [35]	18 [35]	30	-	30	-	AF26…AF38

① Always size manual motor protectors based on the full-load current of the motor.
② For single phase connection diagram see page 4.17.
③ For higher ratings using S803W current limiters see accessories section.
④ Also suitable for tap conductor protection. Group ratings increased to [x] kA using Class RK5 fuses.
⑤ Requires the use of line-side feeder terminal S1-M3-xx: see accessories section.
⑥ NEC refers to the National Electric Code.
⑦ MCCB interrupting rating must be equal to or greater than the rating of the device.

MS Series
Manual motor protectors

Type MS450 / MS451
For applications up to 50A

Suitable applications:

- Single motor, suitable as motor disconnect
- Group motor installation
- Combination motor controller
  - Type E

Frame Sz. 3
MS450-40…MS450-50

Frame Sz. 3
MS451-16…MS451-50

MS450 / MS451 Electrical ratings ①

Thermal setting range (A)	Trip class	Rated operational current I_e (A)	Rated instantaneous short-circuit current setting I_i (A)	AC Motor ratings, breaking all lines, 50/60 Hz (hp)					Catalog number ③
				Single phase ②		Three phase			
				120V	240V	240V	480V	600V	
28.0…40.0	10	40.0	520	3	7.5	15	30	40	MS450-40 MS450-40E
36.0…45.0	10	45.0	585	5	7.5	15	30	40	MS450-45 MS450-45E
40.0…50.0	10	50.0	650	5	10	20	40	50	MS450-50 MS450-50E
11.0…16.0	20	16.0	208	1	3	5	10	15	MS451-16 MS451-16E
14.0…20.0	20	20.0	260	1.5	3	7.5	15	20	MS451-20 MS451-20E
18.0…25.0	20	25.0	325	2	5	10	20	25	MS451-25 MS451-25E
22.0…32.0	20	32.0	416	3	5	10	25	30	MS451-32 MS451-32E
28.0…40.0	20	40.0	520	3	7.5	15	30	40	MS451-40 MS451-40E
36.0…45.0	20	45.0	585	5	7.5	15	30	40	MS451-45 MS451-45E
40.0…50.0	20	50.0	650	5	10	20	40	50	MS451-50 MS451-50E

MS450 / MS451 Short circuit current ratings (kA)

Catalog number ④	UL 508 - Motor controllers, manual (NLRV)							UL 508 - Combination motor controllers (NKJH)				
	Max. fuse size (A)	Fuse class	Circuit breaker	Motor disconnect		Group motor installation		Self-protected Type E ③		Self-protected Type F		
				240V 480V	600V	480Y/ 277V	600Y/ 347V	480Y / 277V	600Y / 347V	480Y / 277V	600Y / 347V	Type F contactors
MS450-40x	500	Any fuse class	MCCB, 500A max. ⑤	65	25	65	25	65	25	-	-	-
MS450-45x				65	25	65	25	25	25	-	-	-
MS450-50x				65	25	65	25	25	25	-	-	-
MS451-16x				65	25	65	25	25	25	-	-	-
MS451-20x				65	25	65	25	25	25	-	-	-
MS451-25x				65	25	65	25	25	25	-	-	-
MS451-32x				65	25	65	25	65	25	-	-	-
MS451-40x				65	25	65	25	65	25	-	-	-
MS451-45x				65	25	65	25	65	25	-	-	-
MS451-50x				65	25	65	25	65	25	-	-	-

① Always size manual motor protectors based on the full-load current of the motor.
② For single phase connection diagram see page 4.17.
③ MS45x-xxE part numbers include the necessary components for Type E applications – Self-protected Type E ratings apply only to these devices.
④ Replace "x" in part number with "E" for self-protected Type E ratings. All other ratings leave blank.
⑤ MCCB interrupting rating must be equal to or greater than the rating of the device.

Type MS495 / MS496
For applications up to 100A

Frame Sz. 4
MS495-40…MS495-100

Frame Sz. 4
MS496-40…MS496-100

Suitable applications:

- Single motor, suitable as motor disconnect
- Group motor installation
- Combination motor controller
  - Type E

MS495 / MS496 Electrical ratings ①

Thermal setting range (A)	Trip class	Rated operational current I_e (A)	Rated instantaneous short-circuit current setting I_i (A)	AC Motor ratings, breaking all lines, 50/60 Hz (hp)					Catalog number ③
				Single phase ②		Three phase			
				120V	240V	240V	480V	600V	
28.0…40.0	10	40.0	520	3	7.5	15	30	40	MS495-40
									MS495-40E
36.0…50.0	10	50.0	650	5	10	20	40	50	MS495-50
									MS495-50E
45.0…63.0	10	63.0	819	5	15	25	50	60	MS495-63
									MS495-63E
57.0…75.0	10	75.0	975	7.5	15	25	60	75	MS495-75
									MS495-75E
70.0…90.0	10	90.0	1170	10	20	30	75	100	MS495-90
									MS495-90E
80.0…95.0	10	100.0	1235	10	20	40	75	100	MS495-100
									MS495-100E
28.0…40.0	20	40.0	520	3	7.5	15	30	40	MS496-40
									MS496-40E
36.0…50.0	20	50.0	650	5	10	20	40	50	MS496-50
									MS496-50E
45.0…63.0	20	63.0	819	5	15	25	50	60	MS496-63
									MS496-63E
57.0…75.0	20	75.0	975	7.5	15	25	60	75	MS496-75
									MS496-75E
70.0…90.0	20	90.0	1170	10	20	30	75	100	MS496-90
									MS496-90E
80.0…95.0	20	95.0	1235	10	20	40	75	100	MS496-100
									MS496-100E

MS495 / MS496 Short circuit current ratings (kA)

Catalog number ④	UL 508 - Motor controllers, manual (NLRV)							UL 508 - Combination motor controllers (NKJH)				
	Max. fuse size (A)	Fuse class	Circuit breaker	Motor disconnect		Group motor installation		Self-protected Type E ③		Self-protected Type F		
				240V 480V	600V	480Y/ 277V	600Y/ 347V	480Y / 277V	600Y / 347V	480Y / 277V	600Y / 347V	Type F contactors
MS495-40x	500	Any fuse class	MCCB, 500A max. ⑤	65	30	65	30	65	30	-	-	-
MS495-50x				65	30	65	30	65	30	-	-	-
MS495-63x				65	30	65	30	65	30	-	-	-
MS495-75x				65	30	65	30	65	30	-	-	-
MS495-90x				65	30	65	30	65	-	-	-	-
MS495-100x				65	30	65	30	65	-	-	-	-
MS496-40x				65	30	65	30	65	30	-	-	-
MS496-50x				65	30	65	30	65	30	-	-	-
MS496-63x				65	30	65	30	65	30	-	-	-
MS496-75x				65	30	65	30	65	30	-	-	-
MS496-90x				65	30	65	30	65	-	-	-	-
MS496-100x				65	30	65	30	65	-	-	-	-

① Always size manual motor protectors based on the full-load current of the motor.
② For single phase connection diagram see page 4.17.
③ MS49x-xxE part numbers include the necessary components for Type E applications – Self-protected Type E ratings apply only to these devices.
④ Replace "x" in part number with "E" for self-protected Type E ratings. All other ratings leave blank.
⑤ MCCB interrupting rating must be equal to or greater than the rating of the device.

Accessories
For Types MS116, MS132, MS45x, MS49x


HKF1-11


HK4-11


HK1-11


HKS4-20

Auxiliary contacts

For use with MS…				Mounting position / max. quantity	Pilot duty rating		Auxiliary contacts				Catalog number
							Instantaneous		Lagging / leading		
116	132	45x	49x		ac	dc	NO	NC	NO	NC	
•	•			Right / 2	B600	Q600	1	1	-	-	HK1-11
•	•						2	-	-	-	HK1-20
•	•						-	2	-	-	HK1-02
•	•						-	-	2	-	HK1-20L
•	•			Front / 1	B300	Q300	1	1	-	-	HKF1-11
•	•						2	-	-	-	HKF1-20
		•	•	Left / 1	A600	Q300	1	1	-	-	HKS4-11
		•	•				2	-	-	-	HKS4-20
		•	•				-	2	-	-	HKS4-02
		•	•	Front / 1	C300	R300	1	1	-	-	HK4-11
		•	•				-	1	1	-	HK4-W


SK1-11


CK1-11


SK4-11

Signalling contacts

For use with MS…				Description	Mounting position / max. quantity	Pilot duty rating		Contacts		Catalog number
116	132	45x	49x			ac	dc	NO	NC	
•	•			Trip (bell) alarm	Right / 1	B600	Q600	1	1	SK1-11
•	•							2	-	SK1-20
•	•							-	2	SK1-02
		•	•		Left / 1	A600	Q300	2	2	SK4-11
	•			Short-circuit trip alarm	Right / 1	B600	Q600	1	1	CK1-11
	•							2	-	CK1-20
	•							-	2	CK1-02

Note(s):
CK1-xx contacts must mount flush on the right side of the MS132; these devices are supplementary and not required for use in UL 508 Type E & F applications

SK4-11 contacts are required for UL 508 Type E applications using types MS4xx; included when purchasing types MS4xx-xxE


AA1-24


AA4-24


UA1-24

Trip units

For use with MS…				Description	Mounting position / max. quantity	Voltage rating; continuous		Brief voltage rating; 5 seconds max.		Catalog number
116	132	45x	49x			50 Hz	60 Hz	50/60	dc	
•	•			Shunt trip	Left / 1	24 v		20...70 v		AA1-24
•	•					110 v		70…190 v		AA1-110
•	•					200…240 v		190…330 v		AA1-230
		•	•			350…415 v		330…500 v		AA1-400
		•	•		Right / 1	20…24 v		20...70 v		AA4-24
		•	•			30…110 v		70…190 v		AA4-110
		•	•			210…240 v		190…330 v		AA4-240
		•	•			350…415 v		330…500 v		AA4-400
•	•			Undervoltage release	Left / 1	-	24 v	-	-	UA1-24
•	•					110 v	120 v	-	-	UA1-120
•	•					-	208 v	-	-	UA1-208
•	•					230 v	240 v	-	-	UA1-230
•	•					415 v	480 v	-	-	UA1-415
•	•					-	575 v	-	-	UA1-575
		•	•		Right / 1	24 v		-	-	UA4-24
		•	•			110…120 v		-	-	UA4-120
		•	•			230…240 v		-	-	UA4-240
		•	•			400 v	-	-	-	UA4-400

Actuation tables

For Types MS116, MS132, MS45x, MS49x

Auxiliary and signaling contact actuation tables

Catalog number	Description	Condition / state						Terminal numbers	For use with MS…			
		Off	On	Thermal overload trip	Short-circuit trip	Under-voltage trip	Shunt trip		116	132	45x	49x
HK1-11	1 NO	O	X	X	X	X	X	33…34	•	•		
	1 NC	X	O	O	O	O	O	41…42				
HK1-20	2 NO	O	X	X	X	X	X	33…34, 43…44	•	•		
HK1-02	2 NC	X	O	O	O	O	O	31…32, 41…42	•	•		
HK1-20L	2 NO leading contacts	O	X	X	X	X	X	33…34, 43…44	•	•		
HKF1-11	1 NO	O	X	X	X	X	X	13…14	•	•		
	1 NC	X	O	O	O	O	O	21…22				
HKF1-20	2 NO	O	X	X	X	X	X	13…14, 23…24	•	•		
HKS4-11	1 NO	O	X	X	X	X	X	33…34			•	•
	1 NC	X	O	O	O	O	O	41…42				
HKS4-20	2 NO	O	X	X	X	X	X	33…34, 43…44			•	•
HKS4-02	2 NC	X	O	O	O	O	O	31…32, 41…42			•	•
HK4-11	1 NO	O	X	X	X	X	X	13…14			•	•
	1 NC	X	O	O	O	O	O	21…22				
HK4-W	1 NO, leading (form C)	O	X	X	X	X	X	11…14			•	•
	1 NC (form C)	X	O	O	O	O	O	11…12				
SK1-11	1 NO	O	O	X	X	X	X	57…58	•	•		
	1 NC	X	X	O	O	O	O	65…66				
SK1-20	2 NO	O	O	X	X	X	X	57…58, 67…68	•	•		
SK1-02	2 NC	X	X	O	O	O	O	55…56, 65…66	•	•		
SK4-11	1 NO	O	O	X	X	X	X	57…58			•	•
	1 NC	X	X	O	O	O	O	65…66				
	1 NO	O	O	O	X	O	O	77…78				
	1 NC	X	X	X	O	X	X	85…86				
CK1-11	1 NO	O	O	O	X	O	O	77…78		•		
	1 NC	X	X	X	O	X	X	85…86				
CK1-20	2 NO	O	O	O	X	O	O	77…78, 87…88		•		
CK1-02	2 NC	X	X	X	O	X	X	75…76, 85…86		•		

Note:
X = Indicates closed state
O = Indicates open state
For connection diagrams, see page 4.17.

Operator positions

Type	Operator position						Key
	Off	On	Thermal overload trip	Short-circuit trip	Undervoltage trip	Shunt trip	
MS116-…	←	↑	←	←	←	←	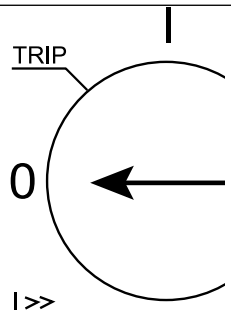
MS132-…	←	↑	↖	↖ ①	↖	↖	
MS45x-…	←	↑	↖	↖	↖	↖	
MS49x-…	←	↑	↖	↖	↖	↖	

① + I>> indicator window = red.

Accessories
For Types MS116, MS132, MS45x, MS49x


PS1-2-0-65


PS1-3-1-100

Three phase busbar

For use with MS…				Description	Rated current (A)	Max. quantity of MMP's	Max. quantity of auxiliary and signaling contacts per MMP		Max. quantity of shunt trips or U.V. releases per MMP	Catalog number
116	132	45x	49x		600 v ac					
•	•			2-position busbar	65	2	-		-	PS1-2-0-65
•	•					2	1		-	PS1-2-1-65
•	•					2	2	or	1	PS1-2-2-65
		•			108	2	-		-	PS4-2-0
		•				2	1	or	1	PS4-2-2
•	•			3-position busbar	65	3	-		-	PS1-3-0-65
•	•					3	1		-	PS1-3-1-65
•	•					3	2	or	1	PS1-3-2-65
•	•				92	3	-		-	PS1-3-0-100
•	•					3	1		-	PS1-3-1-100
•	•					3	2	or	1	PS1-3-2-100
		•			108	3	-		-	PS4-3-0
		•				3	1	or	1	PS4-3-2
•	•			4-position busbar	65	4	-		-	PS1-4-0-65
•	•					4	1		-	PS1-4-1-65
•	•					4	2	or	1	PS1-4-2-65
•	•				92	4	-		-	PS1-4-0-100
•	•					4	1		-	PS1-4-1-100
		•			108	4	-		-	PS4-4-0
		•				4	1	or	1	PS4-4-2
•	•			5-position busbar	65	5	-		-	PS1-5-0-65
•	•					5	1		-	PS1-5-1-65
•	•					5	2	or	1	PS1-5-2-65
•	•				92	5	-		-	PS1-5-0-100
•	•					5	1		-	PS1-5-1-100
•	•			Empty position busbar cover						BS1-3
		•		Empty position busbar cover						BS4-3

Note: Use of PS1 or PS4 busbar in group motor or self-protected Type E or F applications does not inhibit or alter the short-circuit current ratings for the devices utilized.


S1-M3-25


DX495

Three phase feeder terminals

For use with MS…				Description	Rated current (A)	Connecting capacity (AWG)	Required for UL 508 Types E or F applications	Catalog number
116	132	45x	49x		600 v ac			
•	•			Feeder terminal	65	10…4		S1-M1-25
•	•				65	10…4		S1-M2-25
•	•				65	10…4	•	S1-M3-25
•	•				92	8…2	•	S1-M3-35
		•			108	10…1/0		S4-M1
			•	Type E terminal ins. barrier	140	10…1/0	•	DX495

Note(s): Only the S1-M3-xx terminals are acceptable for UL 508 Type E or F applications using type MS132.
The DX495 terminal is included when purchasing type MS49x-xxE devices.


KA450

Terminal shrouds

For use with MS…				Description	Catalog number
116	132	45x	49x		
		•		Terminal shroud, short	KA450
			•		KA495
			•	Terminal shroud, long	KA495C

Accessories
For Types MS116, MS132

ABB Manual motor protectors can also be connected to the SMISSLINE power distribution bus system, which provides a versatile and flexible means of distributing power to a wide variety of electrical devices. For complete system information, see Section 24.

SMISSLINE busbar adaptors for types MS116 / MS132

For use with MS…				Description	Catalog number
116	132	45x	49x		
•	•			Adaptor, L1,L2,L3 bottom feed	ZMS930
•	•			Adaptor, L1,L2,L3 top feed	ZMS932
•	•			Adaptor, without feed wires	ZMS139
				9 mm wide additional housing	ZMS935

Note(s):
The 9 mm wide additional housing is needed when an odd number of combi modules are plugged on the socket; required to fill space into a full module (18 mm).

The 9 mm wide additional housing must also be used when a side-mount auxiliary contact is used.

SMISSLINE busbar combi modules for types MS116 / MS132 + AF Contactors

For use with MS…				Description	Catalog number
116	132	45x	49x		
•	•			Combi module, L1,L2,L3 top feed	ZMS930
•	•			Combi module, without feed wires	ZMS137
				Connection pin set for mounting two combi modules side-by-side	E210-SPV

Accessories
For Types MS116, MS132, MS45x, MS49x


SA1


SA2

Locking accessories

For use with MS…

116	132	45x	49x	Description	Catalog number
•				Lock adapter	SA1
•	•	•	•	Padlock + 2 keys	SA2
•				Lock adapter + padlock + 2 keys	SA3

Note: Types MS132 and MS4xx have integral locking mechanisms


DMS132-G

Door mount kits - Type 12 & IP 65

For use with MS…

116	132	45x	49x	Description	Rotary positions	Catalog number
•	•			Door mount w/ handle, black/gray	On / Trip / Off	DMS132-G
•	•			Door mount w/ handle, red/yellow	On / Trip / Off	DMS132-Y

Note(s): Type MS116 devices trip to the "Off" position
Max. 3 padlocks with bail diameter Ø 4…6.5 mm


MSHD-LY


MSHD-LTY


1SAM101923R0002


1SAM101924R0013


1SAM201920R1000

Through-door hardware - Types 1, 3R, 12 and IP 64

For use with MS…

116	132	45x	49x	Description	Rotary positions	Catalog number
•	•	•	•	Selector handle, black, defeatable, padlockable	On / Off	MSHD-LB
	•	•	•		On / Trip / Off	MSHD-LTB
•	•	•	•	Selector handle, red/yellow, defeatable, padlockable	On / Off	MSHD-LY
	•	•	•		On / Trip / Off	MSHD-LTY
•	•	•	•	Shaft coupler, coded, 6 mm, MSMN	-	1SAM101923R0002
•	•	•	•	Shaft coupler, un-coded, 6 mm, MSMNO	-	1SAM101923R0012
•	•	•	•	Drive spindle, 6 x 30 mm, for horizontal mounting, MSOX-30	-	1SAM101924R0013
•	•	•	•	Drive spindle, 6 x 32 mm, for vertical (standard) mounting, MSOX-32	-	1SAM101924R0003
•	•	•	•	Shaft, 6 x 85 mm	-	OXS6X85
•	•	•	•	Shaft, 6 x 105 mm	-	OXS6X105
•	•	•	•	Shaft, 6 x 130 mm	-	OXS6X130
•	•	•	•	Shaft, 6 x 180 mm	-	OXS6X180
•	•	•	•	Shaft alignment ring, MSH-AR	-	1SAM201920R1000

Note(s): Through-door selector handles are rated Type 1, 3R and 12; IP 64 degree of protection
Max. 3 padlocks with bail diameter Ø 5…8 mm
For coded shaft couplers, the "On" position is dependent on the mounting orientation of the MMP
Must have handle, shaft coupler and shaft for through-door operation. Drive spindles can replace both shaft coupler and shaft.


IB132-G

Enclosures - Type 12 & IP 65

For use with MS…

116	132	45x	49x	Description	Rotary positions	Catalog number
•	•			Molded plastic enclosure, black/gray	On / Trip / Off	IB132-G
•	•			Molded plastic enclosure, red/yellow	On / Trip / Off	IB132-Y
•	•			Adaptor, PG16 to 1/2 NPT	-	PG16-1/2NPT

Note(s): Type E rating for MS132 derated when using IB132 enclosures. Please contact technical support.
Type MS116 devices trip to the "Off" position
Max. 3 padlocks with bail diameter Ø 4…6.5 mm
For UL enclosure type ratings, contact technical support.

Accessories
For Types MS116, MS132, MS45x, MS49x

Close couplers for contactors

Manual motor protector	Miniature contactors		AF contactors						AS contactors		A / AE Contactors		Catalog number
	B6...B7	BC6...BC7	AF09...AF16	AF09Z...AF16Z	AF26...AF38	AF26Z...AF38Z	AF50...AF75	AF95...AF110	AS09...AS16	ASL09...ASL16	A50...A75, AE50...AE75	A95...A110	
MS116-0.16...16	•	•											BEA7/132
			•	•									BEA16-4
					•	•							BEA26-4
									•	•			BEA16-3
MS116-20...25			•	•									BEA16-4
					•	•							BEA38-4
MS116-32					•	•							BEA38-4
MS132-0.16...10	•	•											BEA7/132
			•	•									BEA16-4
					•	•							BEA26-4
									•	•			BEA16-3
MS132-12...16	•	•											BEA7/132
			•	•									BEA16-4
					•	•							BEA38-4
									•	•			BEA16-3
MS132-20...25			•	•									BEA16-4
					•	•							BEA38-4
MS132-32					•	•							BEA38-4
MS45x-40...50							•				•		BEA50/450
MS49x-40...100							•				•		BEA75/495
MS495-40...100								•				•	BEA110/495

Note: For spring terminated AS/ASL, use part number BEA16-3U with integral wire leads for spring terminals.


MS132 + PSR Softstarter


MS132 + AF Contactor


BEA16-4


BEA16-3

Close couplers for softstarters

Manual motor protector	PSR Softstarters				Catalog number
	PSR3...PSR16	PSR25...PSR30	PSR37...PSR45	PSR60...PSR105	
MS116-0.16...16	•				PSR16-MS116
MS116-20...32		•			PSR30-MS132
MS132-0.16...10	•				PSR16-MS116
MS132-12...32		•			PSR30-MS132
MS45x-40...50			•		PSR45-MS450
MS49x-40...100				•	PSR105-MS495

Accessories
For Type MS132

Rated for use with the type MS132, the S803W current limiters can provide selective coordination for individual downstream SCPDs, and can be utilized in combination up to 65 kA at 600 v ac. For more information, see Section 17 - S800 Series.

S803W-SCL32-SR

Current limiters

For use with MS…

116	132	45x	49x	Description	Rated current (A) 600 v ac	Connecting capacity (AWG)	Catalog number
	•			Current limiter, 3-pole	32	14…1	S803W-SCL32-SR
	•				63	14…1	S803W-SCL63-SR
	•				100	14…1	S803W-SCL100-SR

Note(s): The sum of the rated currents of all downstream motor protectors shall not exceed the rated current of the S803W.
The sum of all load currents including inrush currents shall not exceed the maximum permissible load of the S803W.

MS132 Short circuit current ratings using S803W current limiters (kA)

Catalog number	UL 508 - Motor controllers, manual (NLRV)			UL 508 - Combination motor controllers (NKJH)				
	Circuit breaker	Group motor installation ①		Self-protected Type E ②		Self-protected Type F ②		
		240V 480V	600V	480Y/ 277V	600Y/ 347V	480Y/ 277V	600Y/ 347V	Type F contactors
MS132-0.16	MCCB, 400A max. ③	65	65	65	47	65	47	AF26…AF38
MS132-0.25		65	65	65	47	65	47	AF26…AF38
MS132-0.4		65	65	65	47	65	47	AF26…AF38
MS132-0.63		65	65	65	47	65	47	AF26…AF38
MS132-1.0		65	65	65	47	65	47	AF26…AF38
MS132-1.6		65	65	65	47	65	47	AF26…AF38
MS132-2.5		65	65	65	47	65	47	AF26…AF38
MS132-4.0		65	65	65	47	65	47	AF26…AF38
MS132-6.3		65	65	65	18	65	47	AF26…AF38
MS132-10		65	65	65	18	65	47	AF26…AF38
MS132-12		65	65	65	-	65	-	AF26…AF38
MS132-16		65	65	65	-	65	-	AF26…AF38
MS132-20		65	65	65	-	65	-	AF26…AF38
MS132-25		65	65	65	-	65	-	AF26…AF38
MS132-32		65	65	65	-	65	-	AF26…AF38

Maximum load

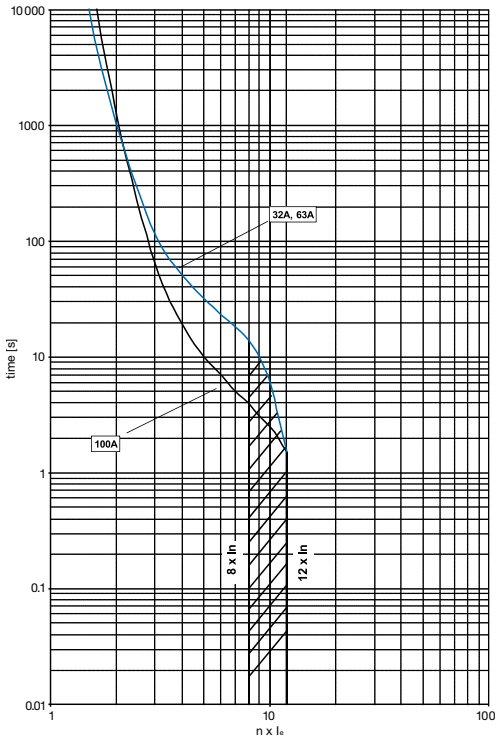

① Also suitable for Tap Conductor protection.
② Requires the use of a line-side feeder terminal S1-M3-xx; see accessories section.
③ MCCB interrupting rating must be equal to or greater than the rating of the device.

Connection diagrams
For Types MS116, MS132, MS45x, MS49x

Connection diagrams

Three phase connection diagram for Types MS116, MS132, and MS4xx

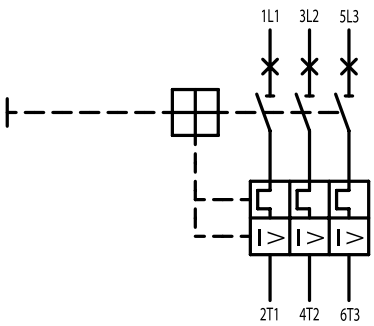

Single phase connection diagram for Types MS116, MS132, and MS4xx

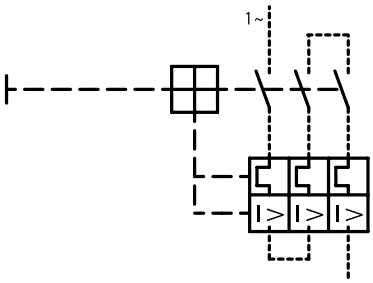

Single and three phase connection diagram when using contactors

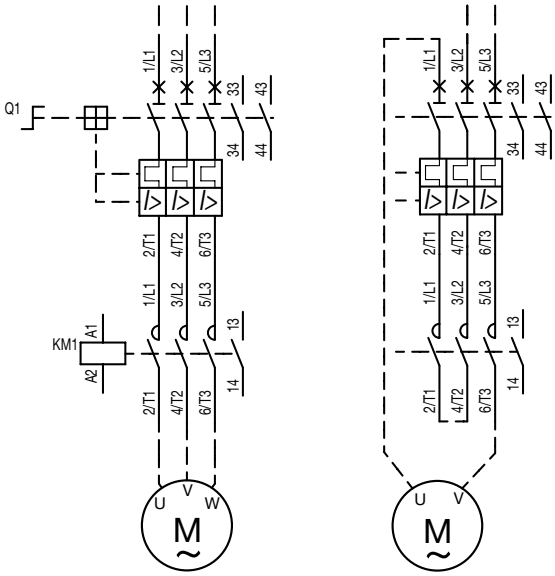

Accessories for use with Type MS116, MS132 & MS4xx

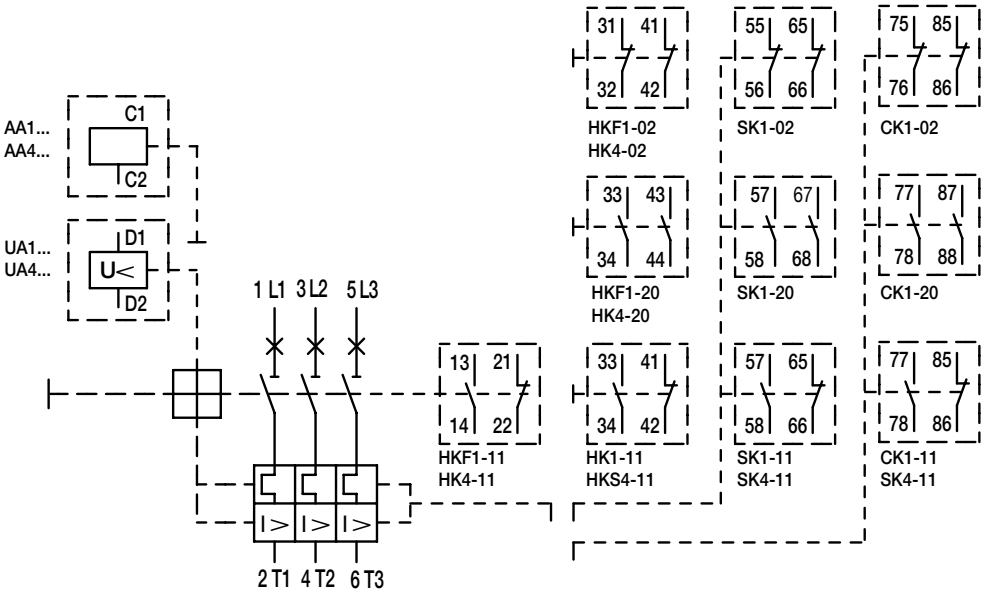

General accessory mounting layout
MS116 & MS132

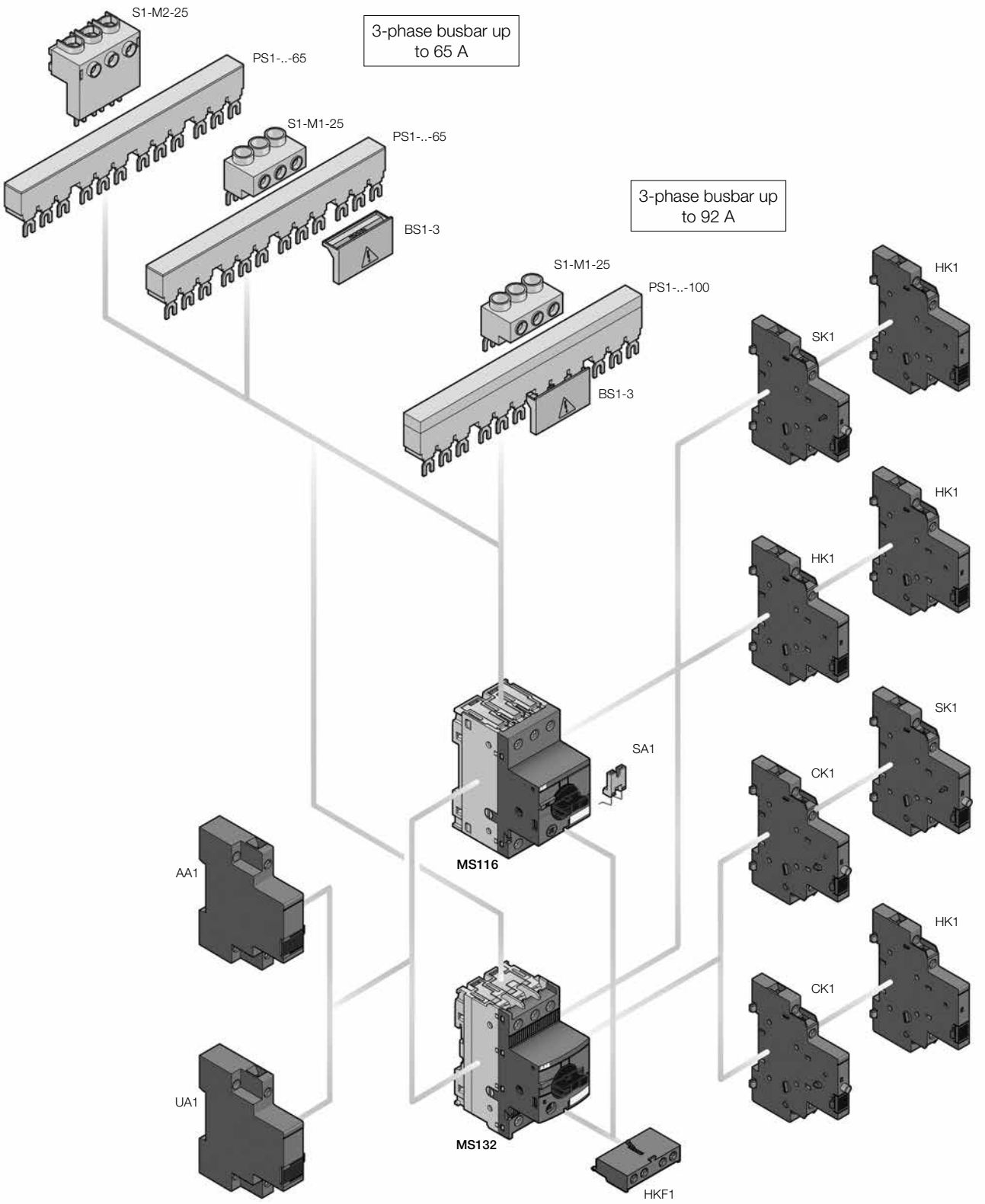

Technical data - IEC/EN
MS116

Main circuit – Utilization characteristics according to IEC/EN

Type	MS116
Standards	IEC/EN 60947–2, IEC/EN 60947-4-1, IEC/EN 60947-1
Rated operational voltage U_e	690 V AC
Rated frequency	50/60 Hz
Trip class	10A
Number of poles	3
Duty time	100 %
Rated impulse withstand voltage U_{imp}	6 kV
Rated insulation voltage U_i	690 V AC
Rated operational current I_e	See ordering details
Rated instantaneous short-circuit current setting I_i	See ordering details
Rated service short-circuit breaking capacity I_{cs}	See table "Short-circuit breaking capacity and back-up fuses"
Rated ultimate short-circuit breaking capacity I_{cu}	See table "Short-circuit breaking capacity and back-up fuses"

Short-circuit breaking capacity and back-up fuses

I_{CS} Rated service short-circuit breaking capacity

I_{CU} Rated ultimate short-circuit breaking capacity

I_{CC} Prospective short-circuit current at installation location

Note: Maximum rated current of the back-up fuses if $I_{CC} > I_{CS}$

Type	230 V AC			400 V AC			440 V AC			500 V AC			690 V AC		
	I_{CS} kA	I_{CU} kA	gG, aM A	I_{CS} kA	I_{CU} kA	gG, aM A	I_{CS} kA	I_{CU} kA	gG, aM A	I_{CS} kA	I_{CU} kA	gG, aM A	I_{CS} kA	I_{CU} kA	gG, aM A
MS116-0.16	No back-up fuse required up to I_{CC} = 50 kA									No back-up fuse required up to I_{CC} = 30 kA					
MS116-0.25															
MS116-0.4															
MS116-0.63															
MS116-1.0															
MS116-1.6															
MS116-2.5							10	10	25	10	10	25	5	5	25
MS116-4.0							6	6	25	6	6	25	2	2	25
MS116-6.3							6	6	63	6	6	63	2	2	40
MS116-10							6	6	63	6	6	63	2	2	50
MS116-12	25	25	80	25	25	80	6	6	63	6	6	63	2	2	50
MS116-16	16	16	80	16	16	80	6	6	63	4	4	63	2	2	63
MS116-20	10	15	-	10	15	-	3	6	-	3	4	-	2	2	-
MS116-25	10	15	-	10	15	-	3	6	-	3	4	-	2	2	-
MS116-32	10	10	-	10	10	-	3	6	-	3	4	-	2	2	-

MS116-10: No need for back-up fuse in networks with a prospective current of up to 50 kA at 400 V.
MS116-16: No need for back-up fuse in networks with a prospective current of up to 16 kA at 400 V.
With an appropriate 80 A type gG fuse the device can be used in a network with a prospective current of up to 100 kA.
MS116-32: No need for back-up fuse in networks with a prospective current of up to 15 kA at 400 V.

Technical data - UL/CSA
MS116

Main circuit – Utilization characteristics according to UL/CSA

Type		MS116
Standards		UL 508, CSA 22.2 No. 14
Maximum operational voltage		600 V AC
Manual motor controller ratings		See table "UL 508 – Manual motor controller"
Trip rating		125 % FLA
Motor ratings	Horse power	See table "Motor rating, three phase"
	Full load amps (FLA)	See table "Motor rating, three phase"
	Locked rotor amps (LRA)	See table "Motor rating, three phase"

Motor rating, three phase

hp Horse power

FLA Full load amps

LRA Locked rotor amps

Type	110-120 V AC			220-240 V AC			440-480 V AC			550-600 V AC		
	hp	FLA	LRA	hp	FLA	LRA	hp	FLA	LRA	hp	FLA	LRA
MS116-0.16	-	0.16	0.96	-	0.16	0.96	-	0.16	0.96	-	0.16	0.96
MS116-0.25	-	0.25	1.5	-	0.25	1.5	-	0.25	1.5	-	0.25	1.5
MS116-0.4	-	0.4	2.4	-	0.4	2.4	-	0.4	2.4	-	0.4	2.4
MS116-0.63	-	0.63	3.78	-	0.63	3.78	-	0.63	3.78	-	0.63	3.78
MS116-1.0	-	1.0	6.0	-	1.0	6.0		1.0	6.0	1/2	0.9	8
MS116-1.6	-	1.6	9.6	-	1.6	9.6	3/4	1.6	12.5	3/4	1.3	10
MS116-2.5	-	2.5	15.0	1/2	2.2	20	1	2.1	15	1-1/2	2.4	16
MS116-4.0	-	4.0	16.0	1	4.2	30	2	3.4	25	3	3.9	25.6
MS116-6.3	1/2	4.4	40	1-1/2	6.4	40	3	4.8	32	5	6.1	36.8
MS116-10	1	8.4	60	3	9.6	64	5	7.6	46	7-1/2	9	50.8
MS116-12	1-1/2	12	80	3	9.6	64	7-1/2	11	63.5	10	11	64.8
MS116-16	2	13.6	100	5	15.2	92	10	14	81	10	11	64.8
MS116-20	3	19.2	128	5	15.2	92	10	14	81	15	17	93
MS116-25	3	19.2	128	7-1/2	22	127	15	21	116	20	22	116
MS116-32	5	30.4	184	10	28	162	20	27	145	25	27	146

① Suitable as motor disconnect only when provided with padlock SA1 or SA3...

Technical data
MS116

General technical data

Type		MS116
Pollution degree		3
Phase loss sensitive		Yes
Ambient air temperature		
Operation	Open - compensated without derating	-25 ... +55 °C
	Open	-25 ... +70 °C
	Enclosed (IB132)	0 ... +40 °C
Storage		-50 ... +80 °C
Ambient air temperature compensation		Continuous
Maximum operating altitude permissible		2000 m
Resistance to shock acc. to IEC 60068-2-27		25 g / 11 ms
Resistance to vibrations acc. to IEC 60068-2-6		5 g / 3 ... 150 Hz
Mounting position		Position 1-6 (optional for single mounting)
Mounting		DIN-rail (EN 60715)
Group mounting		On request
Minimum distance to other units same type	Horizontal	0 mm
	Vertical	150 mm
Minimum distance to electrical conductive board	Horizontal, up to 400 V	0 mm
	Horizontal, up to 690 V	> 1.5 mm
	Vertical	75 mm
Degree of protection	Enclosure / terminals	IP20

Main circuit – Connecting characteristics

Type			MS116 ≤ 16 A	MS116 ≥ 20 A
Connecting capacity				
	Solid	1 or 2 x	1 ... 4 mm²	2.5 ... 6 mm²
	Flexible	1 or 2 x	0.75 ... 2.5 mm²	1 ... 6 mm²
	Stranded acc. to UL/CSA	1 or 2 x	AWG 16-12	AWG 12-8
	Flexible acc. to UL/CSA	1 or 2 x	AWG 16-12	AWG 12-8
Stripping length			9 mm	10 mm
Tightening torques			0.8 ... 1.2 Nm / 10 ... 12 lb.in	2.0 Nm / 18 lb.in
Connection screw			M3.5 (Pozidriv 2 / 5.5 mm)	M4 (Pozidriv 2 / 6.5 mm)

Technical data - IEC/EN
MS132

Main circuit – Utilization characteristics according to IEC/EN

Type	MS132
Standards	IEC/EN 60947–2, IEC/EN 60947-4-1, IEC/EN 60947-1
Rated operational voltage U_e	690 V AC / 250 V DC
Rated frequency	DC, 50/60 Hz
Trip class	10 (10A for MS132-0.16)
Number of poles	3
Duty time	100 %
Rated impulse withstand voltage U_{imp}	6 kV
Rated insulation voltage U_i	690 V AC
Rated operational current I_e	See ordering details
Rated instantaneous short-circuit current setting I_i	See ordering details
Rated service short-circuit breaking capacity I_{cs}	See table "Short-circuit breaking capacity and back-up fuses"
Rated ultimate short-circuit breaking capacity I_{cu}	See table "Short-circuit breaking capacity and back-up fuses"

Short-circuit breaking capacity and back-up fuses

I_{CS} Rated service short-circuit breaking capacity

I_{CU} Rated ultimate short-circuit breaking capacity

I_{CC} Prospective short-circuit current at installation location

Note: Maximum rated current of the back-up fuses if $I_{CC} > I_{CS}$

Type	230 V AC			400 V AC			440 V AC			500 V AC			690 V AC		
	I_{CS} kA	I_{CU} kA	gG, aM A	I_{CS} kA	I_{CU} kA	gG, aM A	I_{CS} kA	I_{CU} kA	gG, aM A	I_{CS} kA	I_{CU} kA	gG, aM A	I_{CS} kA	I_{CU} kA	gG, aM A
MS132-0.16	No back-up fuse required up to I_{CC} = 100 kA														
MS132-0.25															
MS132-0.4															
MS132-0.63															
MS132-1.0															
MS132-1.6															
MS132-2.5															
MS132-4.0							20	20	*	20	20	*	3	3	*
MS132-6.3							20	20	*	20	20	*	3	3	*
MS132-10							20	20	*	20	20	*	3	3	*
MS132-12							20	20	*	20	20	*	3	3	*
MS132-16							20	20	*	20	20	*	3	3	*
MS132-20							20	20	*	20	20	*	3	3	*
MS132-25	50	50	100	50	50	100	20	20	*	10	10	*	3	3	*
MS132-32	25	50	125	25	50	125	20	20	*	10	10	*	3	3	*

MS132-16: No need for back-up fuse in networks with a prospective current of up to 100 kA at 400 V.
MS132-32: No need for back-up fuse in networks with a prospective current of up to 50 kA at 400 V.
With an approbiate 125 A type gG fuse the device can be used in a network with a prospective current of up to 100 kA

* not available yet

Technical data - UL/CSA
MS132

Main circuit – Utilization characteristics according to UL/CSA

Type		MS132
Standards		UL 508, CSA 22.2 No. 14
Maximum operational voltage		600 V AC
Manual motor controller ratings		See table "UL 508 – Manual motor controller"
Trip rating		125 % FLA
Motor ratings	Horse power	See table "Motor rating, three phase"
	Full load amps (FLA)	See table "Motor rating, three phase"
	Locked rotor amps (LRA)	See table "Motor rating, three phase"

Motor rating, three phase

hp Horse power

FLA Full load amps

LRA Locked rotor amps

Type	110-120 V AC			220-240 V AC			440-480 V AC			550-600 V AC		
	hp	FLA	LRA	hp	FLA	LRA	hp	FLA	LRA	hp	FLA	LRA
MS132-0.16	-	0.16	0.96	-	0.16	0.96	-	0.16	0.96	-	0.16	0.96
MS132-0.25	-	0.25	1.5	-	0.25	1.5	-	0.25	1.5	-	0.25	1.5
MS132-0.4	-	0.4	2.4	-	0.4	2.4	-	0.4	2.4	-	0.4	2.4
MS132-0.63	-	0.63	3.78	-	0.63	3.78	-	0.63	3.78	-	0.63	3.78
MS132-1.0	-	1.0	6.0	-	1.0	6.0	-	1.0	6.0	1/2	1.0	6.0
MS132-1.6	-	1.6	9.6	-	1.6	9.6	3/4	1.6	9.6	3/4	1.6	9.6
MS132-2.5	-	2.5	15.0	1/2	2.5	15.0	1	2.5	15.0	1-1/2	2.5	15.0
MS132-4.0	-	4.0	24.0	1	4.0	24.0	2	4.0	24.0	3	3.9	26.0
MS132-6.3	1/2	6.3	37.8	1-1/2	6.3	37.8	3	4.8	32.0	5	6.1	37.0
MS132-10	3/4	10.0	60.0	3	9.6	64.0	5	7.6	46.0	7-1/2	9.0	51.0
MS132-12	1-1/2	12.0	72.0	3	9.6	64.0	7-1/2	11.0	64.0	10	11.0	65.0
MS132-16	2	16.0	84.0	5	15.2	92.0	10	14.0	81.0	10	11.0	65.0
MS132-20	3	19.2	128.0	5	15.2	92.0	10	14.0	81.0	15	17.0	93.0
MS132-25	3	19.2	128.0	7-1/2	22.0	127.0	15	21.0	116.0	20	22.0	116.0
MS132-32	5	30.4	184.0	10	28.0	162.0	20	27.0	145.0	25	27.0	146.0

Technical data
MS132

General technical data

Type		MS132
Pollution degree		3
Phase loss sensitive		Yes
Ambient air temperature		
Operation	Open - compensated without derating	-25 ... +60 °C
	Open	-25 ... +70 °C
	Enclosed (IB132)	0 ... +40 °C
Storage		-50 ... +80 °C
Ambient air temperature compensation		Continuous
Maximum operating altitude permissible		2000 m
Resistance to shock acc. to IEC 60068-2-27		25 g / 11 ms
Resistance to vibrations acc. to IEC 60068-2-6		5 g / 3 ... 150 Hz
Mounting position		Position 1-6 (optional for single mounting)
Mounting		DIN-rail (EN 60715)
Group mounting		On request
Minimum distance to other units same type	Horizontal	0 mm
	Vertical	150 mm
Minimum distance to electrical conductive board	Horizontal, up to 400 V	0 mm
	Horizontal, up to 690 V	> 1.5 mm
	Vertical	75 mm
Degree of protection	Enclosure / terminals	IP20

Main circuit – Connecting characteristics

Type			MS132-0.16 ... MS132-10	MS132-12 ... MS132-16	MS132-20 ... MS132-32
Connecting capacity					
	Solid	1 or 2 x	1 ... 4 mm²	1 ... 4 mm²	2.5 ... 6 mm²
	Flexible	1 or 2 x	0.75 ... 2.5 mm²	0.75 ... 2.5 mm²	1 ... 6 mm²
	Stranded acc. to UL/CSA	1 or 2 x	AWG 16-12	AWG 16-12	AWG 12-8
	Flexible acc. to UL/CSA	1 or 2 x	AWG 16-12	AWG 16-12	AWG 12-8
Stripping length			9 mm	10 mm	10 mm
Tightening torques			0.8 ... 1.2 Nm / 10 ... 12 lb.in	1.5 Nm / 14 lb.in	2.0 Nm / 18 lb.in
Connection screw			M3.5 (Pozidriv 2)	M4 (Pozidriv 2)	M4 (Pozidriv 2)

Technical data
MS116 & MS132 Accessories

General technical data

Type		PS1-x-x-65	PS1-x-x-100	S1-M1-25	S1-M2-25	S1-M3-25	S1-M3-35
Standards		IEC/EN 60947-1, UL 508/60947-4-1A, CAN/CSA C22.2 No.14/60947-4-1-07					
Rated operational voltage U_e		690 V AC					
Rated voltage UL/CSA		600 V AC					
Rated operational current I_e		65 A	100 A	65 A			100 A
Rated current UL/CSA		65 A	92 A	65 A			92 A
Rated frequency		50/60 Hz					
Rated impulse withstand voltage U_{imp}		6 kV					
Rated insulation voltage U_i		690 V AC					
Pollution degree		3					
Cross-section		5 mm²		5 mm²			
Ambient air temperature	Operation	-25...+70 °C					
	Storage	-50...+80 °C					

Connecting characteristics

Type		S1-M1-25	S1-M2-25	S1-M3-25	S1-M3-35
Connecting capacity					
Solid	1 x	6mm2…25 mm2			10...35 mm²
Flexible	1 x	6mm2…16mm2			10...35 mm²
Stranded acc. to UL/CSA	1 x	AWG 10-4			AWG 8-2
Flexible acc. to UL/CSA	1 x	AWG 10-4			AWG 8-2
Tightening torques		2.5 Nm / 22 lb.in			4.5 Nm / 40 lb.in
Connection screw		Pozidriv 2 / M3.5			Hexgon SW4

General technical data

Type			UA1	AA1
Standards			IEC/EN 60947-1, UL 508/60947-4-1A, CAN/CSA C22.2 No.14/60947-4-1-07	
Pick-up value		% of Uc	≥ 85	≥ 70
Drop-out value		% of Uc	35…70	-
Power consumption	Pick-up	VA	9	
	Holding	VA	3	
Ambient air temperature		Operation	-20…+55 °C	
		Storage	-50…+80 °C	

Connecting characteristics

Type		UA1	AA1
Connecting capacity			
Solid	1 x	0.5...1.5 mm²	
	2 x	0.5...1.5 mm²	
Flexible	1 x	0.5...1.5 mm²	
	2 x	0.5...1.5 mm²	
Stranded acc. to UL/CSA	1 or 2 x	AWG 18-14	
Flexible acc. to UL/CSA	1 or 2 x	AWG 18-14	
Stripping length		8 mm	
Tightening torques		0.8...1.2 Nm / 7...10.3 lb.in	
Connection screw		Pozidriv 2 / M3	

Technical data
MS116 & MS132 Accessories

Contact utilization characteristics per IEC

Type	HKF1-xx	HK1-xx	HK1-20L	SK1-xx	CK1-xx
Standards	IEC/EN 60947-5-1				
Rated operational voltage U_e	250 V AC/	690 V AC/			
	250 V DC	600 V DC			
Conventional free-air thermal current I_{th}	5 A	6 A			
Rated frequency	50/60 Hz				
Rated impulse withstand voltage U_{imp}	6 kVA				
Rated insulation voltage U_i	230 V	690 V			
Pollution degree	3				
Ambient air temperature Operation	-20…+55 °C				
Storage	-50…+80 °C				
Resistance to shock acc. to IEC 60068-2-27	25 g / 11 ms				
Resistance to vibrations acc. to IEC 60068-2-6	2 g / 5…150 Hz				
Number of poles	1 N.C. + 1 N.O. or 2 N.O. or 2 N.C.		2 leading N.O.	1 N.C. + 1 N.O. or 2 N.O. or 2 N.C.	
I_e / Rated operational current AC-15 acc. to IEC/EN 60947-5-1 for utilization category					
24 V, 50/60 Hz	3	6			
120 V, 50/60 Hz	3	6			
230 V, 50/60 Hz	1.5	4			
400 V, 50/60 Hz	-	3			
690 V, 50/60 Hz	-	1			
I_e / Rated operational current DC-13 acc. to IEC/EN 60947-5-1 for utilization category					
24 V	1.0	2			
125 V	0.27	0.55			
250 V	0.10	0.27			
600 V	-	0.15			
Minimum switching capacity	17 V / 5 mA				
Short-circuit protective device	10 A Type gG				
Duty time	100 %				
Mounting	Front of MMS	Right side of MMS			
Mounting positions	1-6				
Mechanical durability	100000 cycles				
Electrical durability	100000 cycles				

Contact utilization characteristics per UL/CSA

Type	HKF1-xx	HK1-xx	HK1-20L	SK1-xx	CK1-xx
Standards	UL 508/60947-4-1A, CAN/CSA C22.2 No.14/60947-4-1-07				
Rated voltage UL/CSA	240 V AC/ 250 V DC	600 V AC/ 600 V DC			
Pilot duty	B300, Q300	B600, Q600			
AC thermal rated current	5				
AC maximum volt-ampere making	3600				
AC maximum volt-ampere breaking	360				
DC thermal rated current	2.5				
DC maximum volt-ampere make/break	69				

Connecting characteristics

Type		HKF1-xx	HK1-xx	HK1-20L	SK1-xx	CK1-xx
Connecting capacity						
Solid	1 or 2 x	1...1.5 mm²				
Flexible	1 or 2 x	0.75...1.5 mm²				
Flexible with non-insulated ferrule	1 or 2 x	0.75...1.5 mm²				
Flexible with insulated ferrule	1 or 2 x	0.75...1.5 mm²				
Stranded acc. to UL/CSA	1 or 2 x	AWG 16-14				
Flexible acc. to UL/CSA	1 or 2 x	AWG 16-14				
Stripping length		8 mm				
Tightening torques		0.8...1.2 Nm / 7...10.3 lb.in				
Connection screw		Pozidriv 2 / M3				

Technical data - IEC/EN
MS45x & MS49x

Main circuit – Utilization characteristics according to IEC/EN

Type	MS45x, MS49x
Standards	IEC/EN 60947–2, IEC/EN 60947-4-1, IEC/EN 60947-1
Rated operational voltage U_e	690 V AC / 450 V DC
Rated frequency	50/60 Hz
Trip class	10, 20
Number of poles	3
Duty time	100 %
Rated impulse withstand voltage U_{imp}	6 kV
Rated insulation voltage U_i	690 V AC
Rated operational current I_e	See ordering details
Rated instantaneous short-circuit current setting I_i	See ordering details
Rated service short-circuit breaking capacity I_{cs}	See table "Short-circuit breaking capacity and back-up fuses"
Rated ultimate short-circuit breaking capacity I_{cu}	See table "Short-circuit breaking capacity and back-up fuses"

Short-circuit breaking capacity and back-up fuses

I_{CS} Rated service short-circuit breaking capacity

I_{CU} Rated ultimate short-circuit breaking capacity

I_{CC} Prospective short-circuit current at installation location

Note: Maximum rated current of the back-up fuses if $I_{CC} > I_{CS}$

Type	240 V AC			400 V AC			440 V AC			500 V AC			690 V AC		
	I_{CS} kA	I_{CU} kA	gG, aM A	I_{CS} kA	I_{CU} kA	gG, aM A	I_{CS} kA	I_{CU} kA	gG, aM A	I_{CS} kA	I_{CU} kA	gG, aM A	I_{CS} kA	I_{CU} kA	gG, aM A
Short-circuit protection MS45x															
MS45x-40	No back-up fuse required up to I_{CC} = 100 kA			25	50	160	15	50	125	5	10	100	2	4	63
MS45x-45				25	50	160	15	50	125	5	10	100	2	4	63
MS45x-50				25	50	160	15	50	125	5	10	100	2	4	80

MS45x: No need for back-up fuse in networks with a prospective current of up to 50 kA at 400 V.
With an appropriate 160 A type gG fuse the device can be used in a network with a prospective current of up to 100 kA.

Short-circuit protection MS49x														
MS49x-40	No back-up fuse required up to I_{CC} = 100 kA	25	50	125	20	50	125	6	12	125	3	6	63
MS49x-50		25	50	125	20	50	125	6	12	125	3	6	80
MS49x-63		25	50	160	20	50	160	6	12	160	3	6	80
MS49x-75		25	50	160	20	50	160	6	8	160	3	5	100
MS49x-90		25	50	160	20	50	160	6	8	160	3	5	125
MS49x-100		25	50	160	20	50	160	6	8	160	3	5	125

MS49x-40: No need for back-up fuse in networks with a prospective current of up to 50 kA at 400 V.
With an appropriate 125 A type gG fuse the device can be used in a network with a prospective current of up to 100 kA.
MS49x-100: No need for back-up fuse in networks with a prospective current of up to 50 kA at 400 V.
With an appropriate 160 A type gG fuse the device can be used in a network with a prospective current of up to 100 kA.

Technical data - UL/CSA
MS45x & MS49x

Main circuit – Utilization characteristics according to UL/CSA

Type		MS45x, MS49x
Standards		UL 508, CSA 22.2 No. 14
Maximum operational voltage		600 V AC
Manual motor controller ratings		See table “UL 508 – Manual motor controller”
Trip rating		125 % FLA
Motor ratings	Horsepower	See table “Motor rating, three phase”
	Full load amps (FLA)	See table “Motor rating, three phase”
	Locked rotor amps (LRA)	See table “Motor rating, three phase”

Motor rating, three phase

hp Horsepower
FLA Full load amps (FLA)
LRA Locked rotor amps (LRA)

Type	208 V AC			220-240 V AC			440-480 V AC			550-600 V AC		
	hp	FLA	LRA	hp	FLA	LRA	hp	FLA	LRA	hp	FLA	LRA
Types MS450 / MS451												
MS451-16	5	16.7	102.0	5	15.2	92.0	10	14.0	81.0	15	17.0	93.0
MS451-20	5	16.7	102.0	7.5	22.0	92.0	15	21.0	116.0	20	22.0	116.0
MS451-25	7.5	24.2	140.0	10	28.0	127.0	20	27.0	145.0	25	27.0	146.0
MS451-32	10	30.8	179.0	10	28.0	162.0	25	34.0	183.0	30	32.0	174.0
MS45x-40	15	46.2	257.0	15	42.0	232.0	30	40.0	218.0	40	41.0	232.0
MS45x-45	15	46.2	257.0	15	42.0	232.0	30	40.0	218.0	40	41.0	232.0
MS45x-50	15	46.2	257.0	20	54.0	232.0	40	52.0	290.0	50	52.0	290.0
Types MS495 / MS496												
MS49x-40	15	46.2	257.0	15	42.0	232.0	30	40.0	218.0	40	41.0	232.0
MS49x-50	15	46.2	257.0	20	54.0	232.0	40	52.0	290.0	50	52.0	290.0
MS49x-63	20	59.4	321.0	25	68.0	290.0	50	65.0	363.0	60	62.0	348.0
MS49x-75	25	74.8	404.0	25	68.0	365.0	60	77.0	435.0	75	77.0	434.0
MS49x-90	30	88.0	481.0	30	80.0	435.0	75	96.0	543.0	100	99.0	580.0
MS49x-100	40	114.0	641.0	40	104.0	580.0	75	96.0	543.0	100	99.0	580.0

Technical data
MS45x & MS49x

General technical data

Type		MS45x	MS49x
Pollution degree		3	
Phase loss sensitive		Yes	
Ambient air temperature			
Operation	Open - compensated without derating	-20 ... +60 °C	
	Open	-20 ... +70 °C	
	Enclosed	-20 ... +35 °C	
Storage		-50 ... +80 °C	
Ambient air temperature compensation		Continuous	
Maximum operating altitude permissible		2000 m	
Resistance to shock acc. to IEC 60068-2-27		25 g / 11 ms	-
Resistance to vibrations acc. to IEC 60068-2-6		2 g / 5-150 Hz	
Mounting position		Position 1-6 (optional for single mounting)	
Mounting		DIN-rail 35 mm (EN 60715)	DIN-rail 15 mm / 75 mm (EN 60715)
Minimum distance to other units same type	Horizontal	0 mm	0 mm
	Vertical - up to 240 V	-	50 mm
	Vertical - up to 440 V	-	70 mm
	Vertical - up to 500 V	-	110 mm
	Vertical - up to 690 V	-	150 mm
	Vertical	50 mm	-
Minimum distance to electrical conductive board	Horizontal	10 mm	-
	Horizontal - up to 500 V	-	10 mm
	Horizontal - up to 690 V	-	30 mm
	Vertical - up to 240 V	-	50 mm
	Vertical - up to 440 V	-	70 mm
	Vertical - up to 500 V	-	110 mm
	Vertical - up to 690 V	-	150 mm
	Vertical	50 mm	-
Degree of protection	Enclosure / terminals	IP20	

Main circuit – Connecting characteristics

Type			MS45x	MS49x
Connecting capacity				
	Solid	1 or 2 x	0.75 ... 16 mm²	2.5 ... 16 mm²
	Flexible	1 x	0.75 ... 35 mm²	10 ... 70 mm²
		2 x	0.75 ... 25 mm²	10 ... 50 mm²
	Stranded acc. to UL/CSA	1 x	AWG 18-2	AWG 10-2/0
		2 x	AWG 18-2	AWG 10-1/0
	Flexible acc. to UL/CSA	1 x	AWG 18-2	AWG 10-2/0
		2 x	AWG 18-2	AWG 10-1/0
Stripping length			13 mm	17 mm
Tightening torques			3 - 4.5 Nm / 27 … 40 lb.in	4 - 6 Nm / 35 - 53 lb.in
Connection screw			Pozidriv 2	Hexagon 4

Technical data
MS45x & MS49x Accessories

General technical data

Type		PS4-xxx	S4-M1
Standards		IEC/EN 60947-1	
Rated operational voltage U_e		690 V AC	
Rated operational current I_e		108 A	
Rated frequency		50/60 Hz	
Rated impulse withstand voltage U_{imp}		6 kV	
Rated insulation voltage U_i		690 V AC	
Pollution degree		3	
Cross-section		10 mm²	25 mm²
Ambient air temperature	Operation	-25... +70°C	
	Storage	-50... +80°C	

Main circuit – Connection characteristics

Type		S4-M1
Connecting capacity		
Solid	1x	2.5... 50 mm²
Flexible	1x	4... 16 mm²
Stranded acc. to UL/CSA	1x	AWG 14-4
Flexible acc. to UL/CSA	1x	AWG 14-4
Tightening torques		4 Nm
Connection screw		Pozidriv 2

General technical data

Type			UA4	AA4
Standards			IEC/EN 60947-1, UL 508/60947-4-1A, CAN/CSA C22.2 No.14/60947-4-1-07	
Pick-up value		% of U_c	≥ 85	≥ 70
Drop-out value		% of U_c	35…70	-
Power consumption	Pick-up	VA	20.2	Consult factory
	Holding	VA	7.2	Consult factory

Connection characteristics

Type		UA4	AA4
Connecting capacity			
Solid	1 x	0.5... 2.5 mm²	
	2 x	0.5...1.5 mm² or 0.75...2.5 mm	
Flexible	1 x	0.5...2.5 mm²	
	2 x	0.5...1.5 mm² or 0.75...2.5 mm	
Stranded acc. to UL/CSA	1 or 2 x	AWG 18-14	
Flexible acc. to UL/CSA	1 or 2 x	AWG 18-14	
Stripping length		10 mm	
Tightening torques		0.8...1.2 Nm / 7...10.3 lb.in	
Connection screw		Pozidriv 2 / M3	

Technical data
MS45x & MS49x Accessories

General technical data

Type		HK4-11	HK4-W	HKS4	SK4
Standards		IEC/EN 60947-1, IEC/EN 60947-5-1, UL 508, CSA22.2 No. 14			
Rated operational voltage U_e		230 V AC/220 V DC	690 V AC / 220 V DC	690 V AC	690 V AC
Conventional free-air thermal current I_{th}		2.5 A	5 A	10 A	10 A
Rated frequency		DC, 50/60 Hz			
Rated impulse withstand voltage U_{imp}		6 kV			
Rated insulation voltage U_i		300 V	300 V	690 V	690V
Pollution degree		3			
Ambient air temperature Operation		-20 ... +70°C			
Storage		-50 ... +80°C			
Resistance to shock acc. to IEC 60068-2-27		25 g/11 ms			
Resistance to vibrations acc. to IEC 60068-2-6		2 g / 5 ... 150 Hz			
Number of poles		1 N.C. + 1 N.O.	Changeover	1 N.C. + 1 N.O. / 2 N.O. / 2 N.C.	2 N.C. + 2 N.O.
I_e / Rated operational current AC-15					
acc. to IEC/EN 60947-5-1 for utilization category					
	24 V , 50/60 Hz	2 A	4 A	6 A	6 A
	230 V, 50/60 Hz	0.5 A	3 A	4 A	4 A
	400 V, 50/60 Hz	–	1.5 A	3 A	3 A
	690 V, 50/60 Hz	–	0.5 A	1 A	1 A
I_e / Rated operational current DC-13					
acc. to IEC/EN 60947-5-1 for utilization category	24 V	1 A	1 A	2 A	2 A
	48 V	0.3 A	–	–	–
	60 V	0.15 A	–	–	–
	110 V	–	0.22 A	0.5 A	0.5 A
	230 V	–	0.1 A	0.25 A	0.25 A
Minimum switching capacity		17 V / 1 mA			
Short-circuit protective device		10 A Type gG			
Duty time		100%			
Mounting		Front of MMS	Front of MMS	Left side of MMS	Left side of MMS
Mounting positions		1-6			
Mechanical durability		100,000 cycles			
Electrical durability		100,000 cycles			

Main circuit – Connecting characteristics

Type			HK4-11	HK4-W	HKS4	SK4
Connecting capacity	Solid	1x	0.5... 2.5 mm²			
		2x	0.5... 1.5 mm² or 0.75... 2.5 mm			
	Flexible	1x	0.5... 2.5 mm²			
		2x	0.5... 1.5 mm² or 0.75... 2.5 mm			
Stranded acc. to UL/CSA		1 or 2x	AWG 18-14			
Flexible acc. to UL/CSA		1 or 2x	AWG 18-14			
Stripping length			10 mm			
Tightening torques			0.8... 1.2 Nm / 7... 10.3 lb.in.			
Connection screw			Pozidriv 2			

Approximate dimensions

MS116-0.16... MS116-16, MS132-0.16...MS132-10

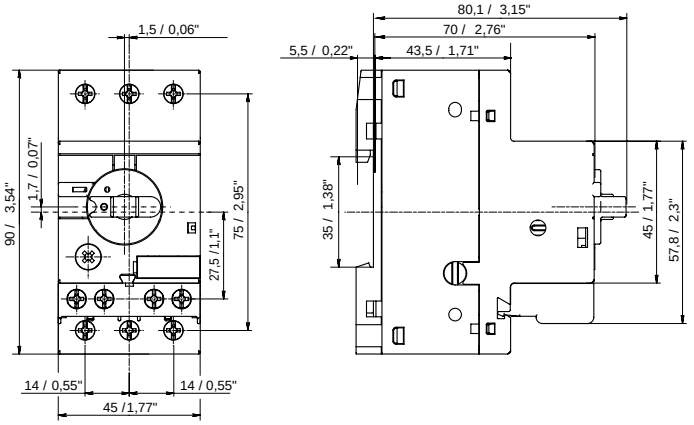

MS116-0.16...MS116-16 or MS132-0.16...MS132-10 + UA1, AA1, SK1, HK1, CK1, HKF1-11

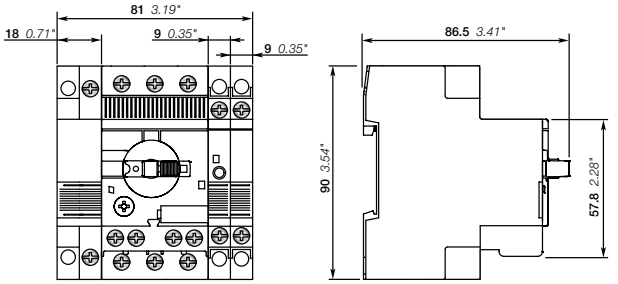

MS116-20... MS116-32, MS132-12... MS132-32

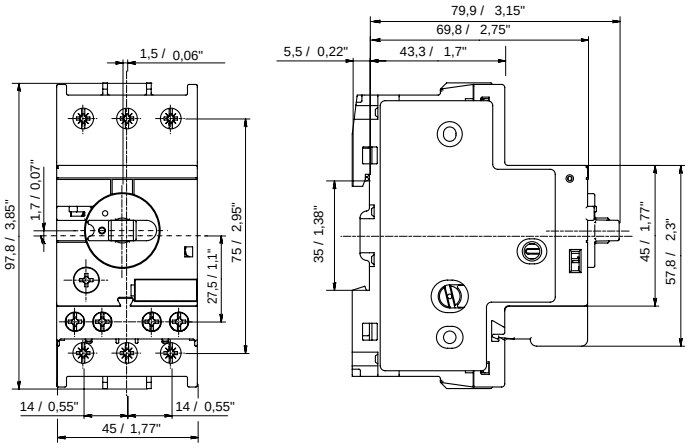

MS116-20... MS116-32 or MS132-12... MS132-32 + UA1, AA1, SK1, HK1, CK1, HKF1-11

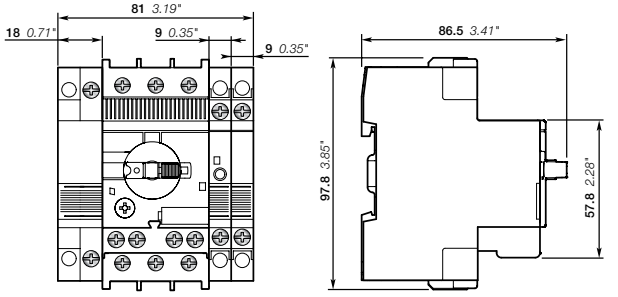

DMS132-x

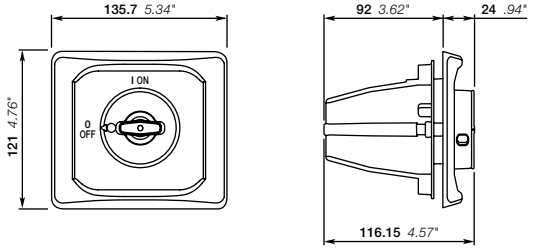

IB132-x

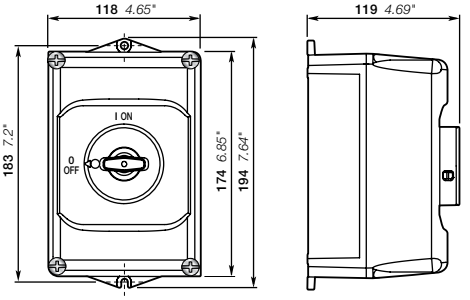

Approximate dimensions

MS450-40...MS450-50, MS451-16...MS451-50

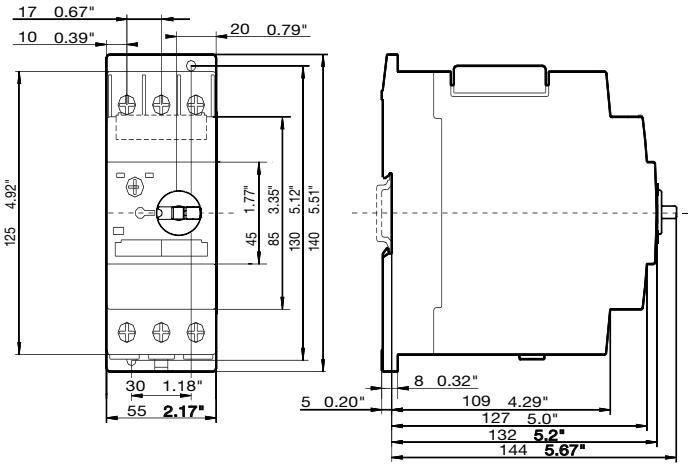

MS495-40...MS495-100, MS496-40...MS496-100